SIMPLY STAINLESS

Modular Sinks, Tables & Shelving

36-GR

36-DGR

SPECIFICATION	
Frames	- 25x25x1.2mm stainless steel round tube.
Runners	- Fully height adjustable (40mm increments). - 1.2mm gauge, no. 4 Finnish. - High quality stainless steel.
Shelf	- Removeable shelf - 1.2mm gauge, no. 4 Finnish. - High quality stainless steel.

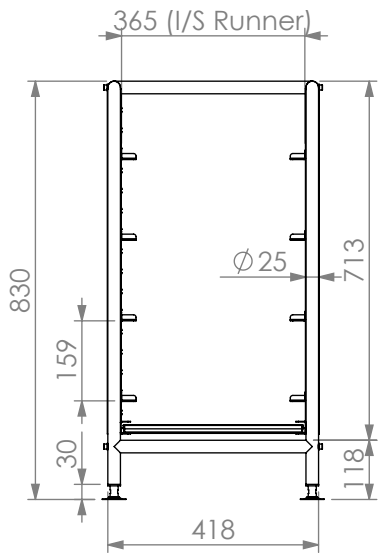

36-GR

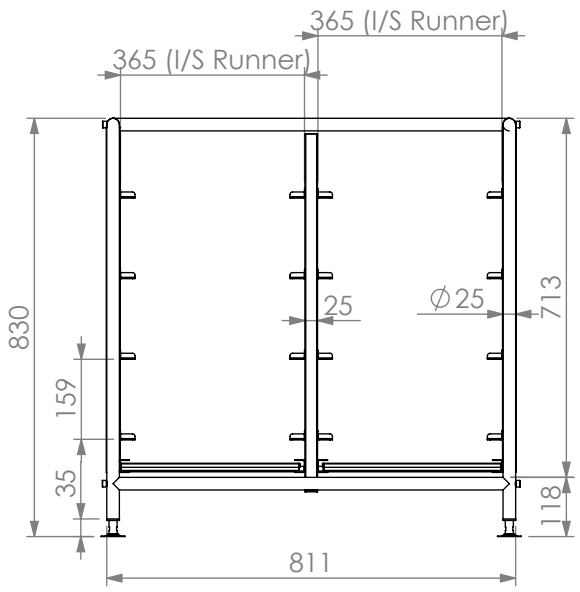

36-DGR

36-GR/DGR	UNDERCOUNTER GLASS RACK			
	Product Code	**Dimensions (mm)**	**Unit weight (Kg)**	**Load capacity (Kg)**
	36-GR	418x488x830	9.72	80
	36-DGR	811x488x830	19.5	16

100% RECYCLABLE STAINLESS STEEL

100% RECYCLED 100% RECYCLABLE